卷册检索号 SEARCH NO. OF THE VOLUME
MLHVDC-LCS-ECI-DD-CS-0702 30-B003701S-T0702

第 1 页 共 1 页
PAGE 1 OF 1

图纸文件目录（首页）

CATALOG OF DRAWING DOCUMENTS (HEAD PAGE)

拉合尔±660kV换流站 工程 施工图 阶段
±660kV Lahore Converter Station PROJECT Detail Design DESIGN STAGE

结构 专业 第 07 卷 第 02 册
Structure SPECIALITY VOLUME BOOK

卷册名称 交流滤波器场隔声屏障
Volume name Noise Barrier in ACF Yard

批 准 APPROVED BY	张[illegible]
审 核 REVIEWED BY	
设计/勘测 DESIGNED BY/ SURVEYED BY	谢财齐
图 纸 0 张 DRAWING NOS.	打印件 1 本 PRINTED COPIES NOS.

序号 No.	图 号 DRAWING NO.	文 件 名 称 DOCUMENT TITLE	版本 EDITION	张 NOS.	本 NOS.	备注 REMARKS
1	30-B003701S-T0702-001	交流滤波器场隔声屏障厂家图纸 Factory Drawings of Noise Barrier in ACF Yard	A		1本	

注:

MLHVDC-LCS-ECI-DD-CS-0702-001A
30-B003701S-T0702-001

巴基斯坦默蒂亚里-拉合尔±660kV 直流输电工程

拉合尔±660kV 换流站工程

±660kV HVDC Project from Matiari to Lahore in Pakistan

±660kV Lahore Converter Station

交流滤波器场隔声屏障 厂家图纸

Factory Drawings of Noise Barrier in ACF Yard

中国电力技术装备有限公司
China Electric Power Equipment and Technology Co., Ltd.
中国电力工程顾问集团华东电力设计院有限公司
East China Electric Power Design Institute of China Power Engineering Consulting Group

May, 2019

巴基斯坦默蒂亚里—拉合尔±660kV 直流输电工程

±660kV HVDC Project from Matiari to Lahore in Pakistan

拉合尔±660kV 换流站

±660kV Lahore　Converter Station

交流滤波场声屏障

Sound barrier for AC filter field

国网电力科学研究院武汉南瑞有限责任公司

Wuhan Nari Limited Liability Company Of State Grid Eleectric Power Research Institute

2018 年 11 月

批准：　　裴春明
approved by

审核：　　朱晓东
reviewed

校核：　　赵欣宇
checked by

编制：　　杨黎波
prepared by

图纸文件目录

CATALOG OF DRAWING DOCUMENTS

拉合尔±660kV换流站 工程 施工图 阶段 土建 专业 第 卷 第 册
±660kV Lahore Converter Station PROJECT Detail Design DESIGN STAGE Structure SPECIALITY VOLUME BOOK

序号 No.	图 号 DRAWING NO.	文件名称 DOCUMENT TITLE	版本 EDITION.	张 NOS.	本 NOS.	备注 REMARKS
1	JZ-PA-LF-001	降噪设计说明 Description of noise reduction design	A	1		
2	JZ-PA-LF-002	钢结构设计说明 Description of steel structure design	A	1		
3	JZ-PA-LF-003	声屏障总平面图 Plan layout of sound barrier	A	1		
4	JZ-PA-LF-004	A~B段声屏障立面图 Elevation of sound barrier for section A~B	A	1		
5	JZ-PA-LF-005	声屏障节点图 Node graph of sound barrier	A	1		
6	JZ-PA-LF-006	钢结构节点图(一) Node graph of steel structure (1)	A	1		
7	JZ-PA-LF-007	钢结构节点图(二) Node graph of steel structure (2)	A	1		

版权所有，不得翻印
图形文件名

降噪设计说明

1.工程概况

拉合尔±660kV换流站位于巴基斯坦旁遮普省拉合尔，位于拉合尔市西南约55km，临近Bhai Pheru-Mor Khunda公路，交通便利。本工程对站址南侧侧交流滤波器围栏处设置9m高声屏障（带隔声和吸声功能）。

2.主要设计依据

2.1.《Minimum Design Loads for Buildings and Other Structures》（ASCE 7-10）
2.2.《Design of Latticed Steel Transmission Structures》（ASCE10-15）
2.3.《Specification for Structural Steel Buildings》（AISC 360-10）
2.4.《Substation Structure Design Guide》（ASCE 113-2008）
2.5.《National Electrical Safety Code》（NESC）
2.6.《Structural Welding Code--Steel》(AWS D1.1/D1.1M)
2.7.《American Institute of Steel Construction》（AISC）
2.8.《Standard Specification for Zinc (Hot-Dip Galvanized) Coatings on Iron and Steel Products》（ASTM - A123）
2.9.《工业企业厂界环境噪声排放标准》（GB12348-2008）
2.10.《声环境质量标准》（GB3096-2008）
2.11.《钢结构设计标准》（GB50017-2017）
2.12.《钢结构工程施工质量验收规范》(GB50205-2001)
2.13.《钢结构工程施工规范》(GB 50755-2012)

3.降噪标准

3.1 站内声环境有良好的改善。

4.降噪设备设计条件

海拔高度：≤1000m
最高气温：52.5℃
最低气温：-2.2℃
最大日温差：25℃
覆冰厚度：0mm
相对湿度：57%
日照强度：0.1kW/m^2
设计风速：按50年一遇10m高10min基本风压值0.60kN/m^2(31.1m/s);
表面防腐年限：25年，整体维护寿命：20年，结构设计年限50年。

5.交流滤波场声屏障性能要求

5.1 声学性能指标

5.1.1 声屏障所采用的吸隔声板在125Hz~5000Hz频段的1/3倍频程中心频率计权隔声量Rw≥44dB（A）。
5.1.2 声屏障所采用的隔声板在125Hz~5000Hz频段的1/3倍频程中心频率NRC≥0.95。
5.2 吸隔声板材料要求
5.2.1 声屏障隔声板设计总厚度不小于150mm，正面吸隔声板设计总厚度不小于100mm，防火墙吸声体设计总厚度不小于100mm。
5.2.2 屏障板的背板厚度为不小于2mm的镀锌钢板，护面板为厚度不小于1mm的镀锌穿孔板（孔径ø2.5，孔率大于25%），骨架厚度为不小于1.5mm的镀锌钢板。
5.2.3 吸隔声板和吸声体的吸声材料采用容重为48kg/m^{3}的离心玻璃棉，并用憎水玻璃丝布包覆。
5.2.4 声屏障每平方米的重量不大于45kg，不小于40kg。

6.钢架材料

6.1 所有钢架结构的型钢梁、柱、杆件及连接件材料均采用Q355B。
6.2 螺栓采用8.8级热浸锌螺栓，质量等级为C级。
6.3 焊条采用E50型焊条，所有焊缝均为封闭焊，未注明焊缝高度不小于6mm，坡口焊接焊缝质量等级为二级，其它为三级。
所有非施工图所示构件拼接用对接焊缝质量应达到二级。

7. 接地要求

所有的钢柱、梁、连接件等均应进行热镀锌处理。所有钢柱与梁之间的连接处应保证电气可靠连通，具体要求如下。
7.1 钢结构节点之间应采用35mm2多股绝缘软铜线（至少2点）相互可靠连接；
7.2 相邻钢柱之间的所有声屏障板应采用35mm2多股绝缘软铜线（至少2点）相互可靠连接，之后再通过35mm2多股绝缘软铜线与主体钢结构相互可靠连接（至少2点），与主接地网连接的钢绞线或铜排由用户提供。
7.3 在钢柱底脚或底梁的适当位置应每隔约30m设一个引下接地端子。接地端子应为热镀锌件。

8.其他

8.1 未尽事宜应按《巴基斯坦默蒂亚里-拉合尔±660kV直流输电工程拉合尔±660kV换流站换流变压器BOX-IN和全站声屏障采购技术规范书》中相关要求执行。

Description of noise reduction design

1. Project Overview

±660kV Matiari Converter Station is located in Pakistan's sindh province hyderabad city modiari area, it's about 40km from the city center, close to the N5 expressway. In this project, 9m high noise barrier (with sound insulation and sound absorption function) was set up at the ac filter fence at the northeast of the site.

2. References

2.1.《Minimum Design Loads for Buildings and Other Structures》（ASCE 7-10）
2.2.《Design of Latticed Steel Transmission Structures》（ASCE10-15）
2.3.《Specification for Structural Steel Buildings》（AISC 360-10）
2.4.《Substation Structure Design Guide》（ASCE 113-2008）
2.5.《National Electrical Safety Code》（NESC）
2.6.《Structural Welding Code--Steel》(AWS D1.1/D1.1M)
2.7.《American Institute of Steel Construction》（AISC）
2.8.《Standard Specification for Zinc (Hot-Dip Galvanized) Coatings on Iron and Steel Products》（ASTM - A123）
2.9.《Emission standard for industrial enterprises noise at boundary》（GB12348-2008）
2.10.《Environmental quality standard for noise》（GB3096-2008）
2.11.《Standard for design of steel structure》（GB50017-2017）
2.12.《Code for acceptance of construction quality of steel structure》(GB50205-2001)
2.13.《Code for Construction of Steel Structure》(GB 50755-2012)

3.Standards requirement

3.1 The acoustic environment in the station has been improved.

4.Design conditions for equipment

Altitude：≤1000m
Max. temperature：52.5℃
Min. temperature：1.5℃
Maximum daily temperature difference：22.7℃
Ice thickness：0mm
relative humidity：58.8%
Irradiance：0.7kW/m^2
Designed wind velocity：Once in fifty years 10mhight10min;Basic wind pressure; 0.60kN/m^2(31.1m/s)
Surface corrosion protection period：25y，Overall maintenance life：30y，Structural design period 50y.

5.Property requirements of noise barrier

5.1 Acoustic performance index

5.1.1 The suction sound insulation board used in the Noise Barrier with 1/3 octave center frequency weighted of the frequency range from 125 Hz to 5000 Hz is that the sound insulation Rw≥ 44dB（A）

5.1.2 For sound absorber which used in Noise Barrier with 1/3 octave center frequency of the frequency range from 125Hz to 5000Hz, NRC≥0.9, and sound insulation board's NRC≥0.95.

5.2 Property requirements of material

5.2.1 The total thickness of suction sound insulation board on the top is not less than 150mm, and the front board not less than 100mm, and the board on firewall not less than100mm.

5.2.2 The thickness of back plate of board ≥ 2mm，and the cover plate's thickness not less than 1mm（aperture ø2.5，porosity>25%），and frame's thichness ≥ 1.5mm. All use galvanized steel sheet.

5.2.3 The sound absorbing material is made of centrifugal glass wool having a bulk density of 48 kg/m, and is covered with a hydrophobic glass cloth.

5.2.4 The weight of noise barrier per square meter is between 40kg to 45kg.

6.Steel frame material

6.1 All steel frame structures, steel beams, columns, rods and joints are made of Q355B
6.2 The bolts are made of 8.8 grade hot dip galvanized bolts with a quality class of C.
6.3 The welding rod adopts E50 type welding rod. All the welds are closed welding. The height of the weld is not indicated to be less than 6mm. The quality of the weld at the groove is Grade II, and the others are Grade III.
The quality of butt welds for splicing of all components shown in the non-construction drawings shall be two.

7. Earthing

All steel columns, beams and fittings shall be hot-dip galvanized.All connections between steel columns and beams shall ensure reliable electrical connections, as specified below
7.1 35mm^{2}multi-strand insulated soft copper wire shall be used for reliable connection between steel structure nodes(at least 2 points).
7.2 All noise barrier plates between adjacent steel columns shall be reliably connected with each other by 35mm^{2}multiple insulated soft copper wires (at least 2 points), and then reliably connected with the main steel structure through 35mm^{2}multiple insulated soft copper wires (at least 2 points). The copper strand or copper strip connected with the main grounding network shall be provided by the user.
7.3 At the bottom of the steel column or the appropriate position of the bottom beam should be every about 30m set a lead grounding terminal.The grounding terminal shall be hot-dip galvanized.

8. Others

8.1 Other matters execute with《Technical Specification for Converter BOX-IN and the Whole Station Sound Barrier Purchasing Technical Specification for the 660 kV DC Transmission Project of the 660 kV DC Transmission Project in Meridian, Lahore, Pakistan》

Reference Drawings

Drwg. No.	Title

Revisions

	Name	Date	Notes

巴基斯坦默蒂亚里-拉合尔±660kV直流输电工程
±660kV HVDC Project from Matiari to Lahore in Pakistan

NATIONAL TRANSMISSION & DESPATCH COMPANY (NTDC) LIMITED PAKISTAN

CONTRACTOR 国家电网 STATE GRID 中国电力技术装备有限公司 CHINA ELECTRIC POWER EQUIPMENT AND TECHNOLOGY CO.,LTD.

SUBCONTRACTOR NARI 国网电力科学研究院武汉南瑞有限责任公司 WUHAN NARI LIMITED LIABITED COMPANY OF STATE GRID ELECTRIC POWER RESEARCH INSTITUTE

拉合尔±660kV换流站
±660kV Lahore Converter Station

设计阶段 PHASE：施工图阶段 Detail Design

	姓名 Name	日期 Date
设计 Designed		2018.12.10
校核 Checked		2018.12.12
审核 Reviewed		2018.12.13
批准 Approved		2018.12.15

降噪设计说明
Description of noise reduction design

比例 Scale | 图号 DWG NO. JZ-PA-LF-001 | 版本 REV. A

420X594

版权所有，不得翻印
图形文件名

钢 结 构 设 计 说 明

1 设计依据的规范,规程及规定:

1.1 本工程施工图按初步设计批文进行设计。

1.2 美国现行建筑结构设计规范、规程。

1.3 钢结构设计、制作、安装、验收应遵循下列规范、规程:

1.3.1.《Minimum Design Loads for Buildings and Other Structures》(ASCE 7-10)

1.3.2.《Design of Latticed Steel Transmission Structures》(ASCE10-15)

1.3.3.《Specification for Structural Steel Buildings》(AISC 360-10)

1.3.4.《Substation Structure Design Guide》(ASCE 113-2008)

1.3.5.《National Electrical Safety Code》(NESC)

1.3.6.《Structural Welding Code--Steel》(AWS D1.1/D1.1M)

1.3.7.《American Institute of Steel Construction》(AISC)

1.3.8.《Standard Specification for Zinc (Hot-Dip Galvanized) Coatings on Iron and Steel Products》(ASTM - A123)

1.3.9《钢结构设计标准》(GB50017-2017)。

1.3.10《钢结构工程施工质量验收规范》(GB50205-2001)。

1.3.11《钢结构焊接规范》(GB 50661-2011)。

1.3.12《六角头螺栓-C级》(GB5780-2016)。

2. 本说明为本工程钢结构部分说明。

3. 主要设计条件:

3.1 本工程主体结构设计使用年限为50年。

3.2 本工程建筑抗震设防按7度计算,7度抗震构造设防;

4 本工程所有结构施工图中标注的尺寸除标高以米(m)为单位外,其它尺寸均以毫米(mm)单位.所有尺寸均以标注为准,不得以比例尺量取图中尺寸。

5 材料:

5.1 本工程所采用的钢材除满足国家材料规范要求外,地震区尚应满足下列要求:

5.1.1 钢材的抗拉强度实测值与屈服强度实测值的比值不应小于1.2。

5.1.2 钢材应有明显的屈服台阶,且伸长率应大于20%。

5.1.3 钢材应有良好的可焊性和合格的冲击韧性,

5.2 所有钢架结构的型钢梁、柱、杆件、抗剪键及连接件材料均采用Q355B。

5.3 所有普通螺栓采用8.8级热浸锌螺栓。

5.4 本工程所有钢构件规格、型号未经设计院同意严禁任意替换。

6 钢结构制作与加工:

6.1 所有钢构件在制作前均放1:1施工大样,复核无误后方可下料。

6.2 钢材加工前应进行校正,使之平整,以免影响制作精度。

6.3 除地脚螺栓外,钢结构构件上螺栓钻孔直径比螺栓直径大2.0mm。

6.4 焊接:

6.4.1 焊接时应选择合理的焊接工艺及焊接顺序,以减小钢结构中产生的焊接应力和焊接变形。

6.4.2 Q355与Q355钢间焊接应采用E50型焊条。

6.4.3 焊缝质量等级:坡口焊质量等级为二级,其它为三级。
所有非施工图所示构件拼接用对接焊缝质量应达到二级。

6.4.4 图中未注明焊缝高度不小于6mm,并不小于较薄杆件厚度。

6.4.5 应保证切割部位准确、切口整齐,切割前应将钢材切割区域表面的铁锈、污物等清除干净,切割后应清除毛刺、熔渣和飞溅物。

6.4.6 所有焊缝均为封闭焊。

6.5 化学螺栓选用应符合降噪设备招标技术规范书规定。

7 钢结构的运输、检验、堆放:

7.1 在运输及操作过程中应采取措施防止构件变形和损坏。

7.2 结构安装前应对构件进行全面检查:如构件的数量、长度、垂直度,安装接头处螺栓孔之间的尺寸是否符合设计要求等。

7.3 构件堆放场地应事先平整夯实,并做好四周排水。

7.4 构件堆放时,应先放置枕木垫平,不宜直接将构件放置于地面上。

8 钢结构安装:

8.1 结构吊(安)装时,应采取有效措施,确保结构的稳定,并防止产生过大变形。

8.2 结构安装完成后,应详细检查运输,安装过程中涂层的擦伤,并补刷油漆,对所有的连接螺栓应逐一检查,以防漏拧或松动。

8.3 不得利用已安装就位的构件起吊其他重物,不得在构件上加焊非设计要求的其它物件。

9 钢结构防腐:

9.1 所有钢构件采用热浸锌防腐处理。

9.2 除锈等级为$Sa2\frac{1}{2}$,防腐年限为30年,所有构件采用热镀锌防腐,外露表面无需涂漆处理。

10 钢结构维护:

钢结构使用过程中,应根据材料特性(如涂装材料使用年限,结构使用环境条件等),定期对结构进行必要维护(如对钢结构重新进行涂装,更换损坏构件等),以确保使用过程中的结构安全。

11 其它:

11.1 未尽事宜应按《巴基斯坦默蒂亚里-拉合尔±660kV直流输电工程拉合尔±660kV换流站换流变压器BOX-IN和全站声屏障采购技术规范书》中相关要求执行。

Description of steel structure design

1 References

1.1 The construction drawing of this project is designed according to the preliminary design approval.

1.2 Standard and standard for structural design of buildings in the United States.

1.3 The design, manufacture, installation and acceptance of steel structure shall follow the following specifications and procedures:

1.3.1.《Minimum Design Loads for Buildings and Other Structures》(ASCE 7-10)

1.3.2.《Design of Latticed Steel Transmission Structures》(ASCE10-15)

1.3.3.《Specification for Structural Steel Buildings》(AISC 360-10)

1.3.4.《Substation Structure Design Guide》(ASCE 113-2008)

1.3.5.《National Electrical Safety Code》(NESC)

1.3.6.《Structural Welding Code--Steel》(AWS D1.1/D1.1M)

1.3.7.《American Institute of Steel Construction》(AISC)

1.3.8.《Standard Specification for Zinc (Hot-Dip Galvanized) Coatings on Iron and Steel Products》(ASTM - A123)

1.3.9《Standard for design of steel structure》(GB50017-2017)。

1.3.10《Code for acceptance of construction quality of steel structure》(GB50205-2001)

1.3.11《Code for Welding of Steel Structures》(GB 50661-2011)。

1.3.12《Hexagen head bolts-Product grade C》(GB5780-2016)。

2. The description is part of the steel structure of the project.

3. Main design conditions::

3.1 The design service life of the main structure of the project is 50 years.

3.2 The seismic fortification of this project is calculated according to 7 degrees.

4 All dimensions marked in the construction drawings of the structure of project shall be in mm except the elevation in meters. All dimensions shall be subject to the mark and shall not be measured by scale.

5 Materials:

5.1 In addition to meeting the requirements of national material specifications,the steel used in this project should also meet the following requirements in the earthquake zone

5.1.1 The ratio of the measured tensile strength of steel to the measured yield strength should not be less than 1.2.

5.1.2 The steel shall have obvious yield steps and the elongation shall be greater than 20%.

5.1.3 Steel shall have good weldability and qualified impact toughness.

5.2 Q355B is used for all steel girders, columns, bars, shear keys and connectors of steel frame structure.

5.3 All normal bolts shall use grade 8.8 hot dip zinc bolts.

5.4 All steel component specifications and models of the project are strictly prohibited to be replaced without the consent of the design institute.

6 Production and processing

6.1 All steel components are put 1:1 construction sample before production, check and correct before blanking.

6.2 Before steel processing should be corrected to make it smooth, so as not to affect the accuracy of production.

6.3 In addition to anchor bolts, the diameter of bolt drilling on steel structural members is 2.0mm larger than that of bolts.

6.4 Welding

6.4.1 Reasonable welding process and welding sequence should be selected to reduce welding stress and deformation in steel structure.

6.4.2 E50 type electrode shall be used for welding between Q355 and Q355 steel.

6.4.3 Weld quality grade: grade 2 for groove welding, grade 3 for others.
Butt weld quality of all components splicing as shown in the non-construction drawing shall reach level 2.

6.4.4 It is not indicated in the figure that the welding seam height shall not be less than 6mm, and shall not be less than the thickness of thinner bars.

6.4.5 The cutting site should be accurate and the incision should be neat. Rust and dirt on the surface of the steel cutting area should be cleaned before cutting. Burrs, slag and splashes should be removed after cutting.

6.4.6 All welds are closed welds.

6.5 The selection of chemical bolts shall comply with the technical specification for noise reduction equipment bidding.

7 Transportation, inspection and stacking

7.1 Measures should be taken to prevent member deformation and damage during transportation and operation.

7.2 Before the installation of the structure, the components should be comprehensively inspected, such as the number, length and perpendicularity of components, and whether the dimensions between bolt holes at the installation joints meet the design requirements.

7.3 Component stacking site should be prior to leveling and tamping, and do a good job of drainage around.

7.4 When component piles up, should place pillow mat to level first, unfavorable and direct component places on the ground.

8 Installation

8.1 When the structure is installed, effective measures should be taken to ensure the stability of the structure and prevent excessive deformation.

8.2 After the completion of structural installation, the transportation shall be inspected in detail, the abrasion of coating in the installation process, and the paint shall be repainted. All connection bolts shall be inspected one by one to prevent leakage or looseness.

8.3 No other heavy objects shall be lifted or welded on the members that are not required by the design.

9 Anticorrosion

9.1 All steel components are treated with hot dip zinc corrosion protection.

9.2 The derusting grade is Sa2, , the anticorrosion life is 30 years, all components are hot-dip galvanized anticorrosion, the exposed surface does not need to be painted.

10 Maintaining

During the use of steel structure, the necessary maintenance of the structure (such as re-coating the steel structure, replacing damaged components, etc.) should be carried out regularly according to the material characteristics (such as the service life of coating materials, the environmental conditions of the structure) to ensure the structural safety in the use process.

11 Others

11.1 The processing factory should check the size on the spot and change rheology before processing and then release samples and cut materials.

Reference Drawings

Drwg. No.	Title

Revisions

	Name	Date	Notes

巴基斯坦默蒂亚里-拉合尔±660kV直流输电工程

±660kV HVDC Project from Matiari to Lahore in Pakistan

NATIONAL TRANSMISSION & DESPATCH COMPANY (NTDC) LIMITED PAKISTAN

CONTRACTOR 国家电网 STATE GRID 中国电力技术装备有限公司 CHINA ELECTRIC POWER EQUIPMENT AND TECHNOLOGY CO.,LTD.

SUBCONTRACTOR NARI 国网电力科学研究院武汉南瑞有限责任公司 WUHAN NARI LIMITED LIABITED COMPANY OF STATE GRID ELECTRIC POWER RESEARCH INSTITUTE

拉合尔±660kV换流站

±660kV Lahore Converter Station

设计阶段 PHASE: 施工图阶段 Detail Design

	姓名 Name	日期 Date
设计 Designed		2018.12.10
校核 Checked		2018.12.12
审核 Reviewed		2018.12.13
批准 Approved		2018.12.15

钢结构设计说明

The description of steel structure design

比例 Scale | 图号 DWG NO. JZ-PA-LF-002 | 版本 REV. A

420X594

版权所有，不得翻印
图形文件名

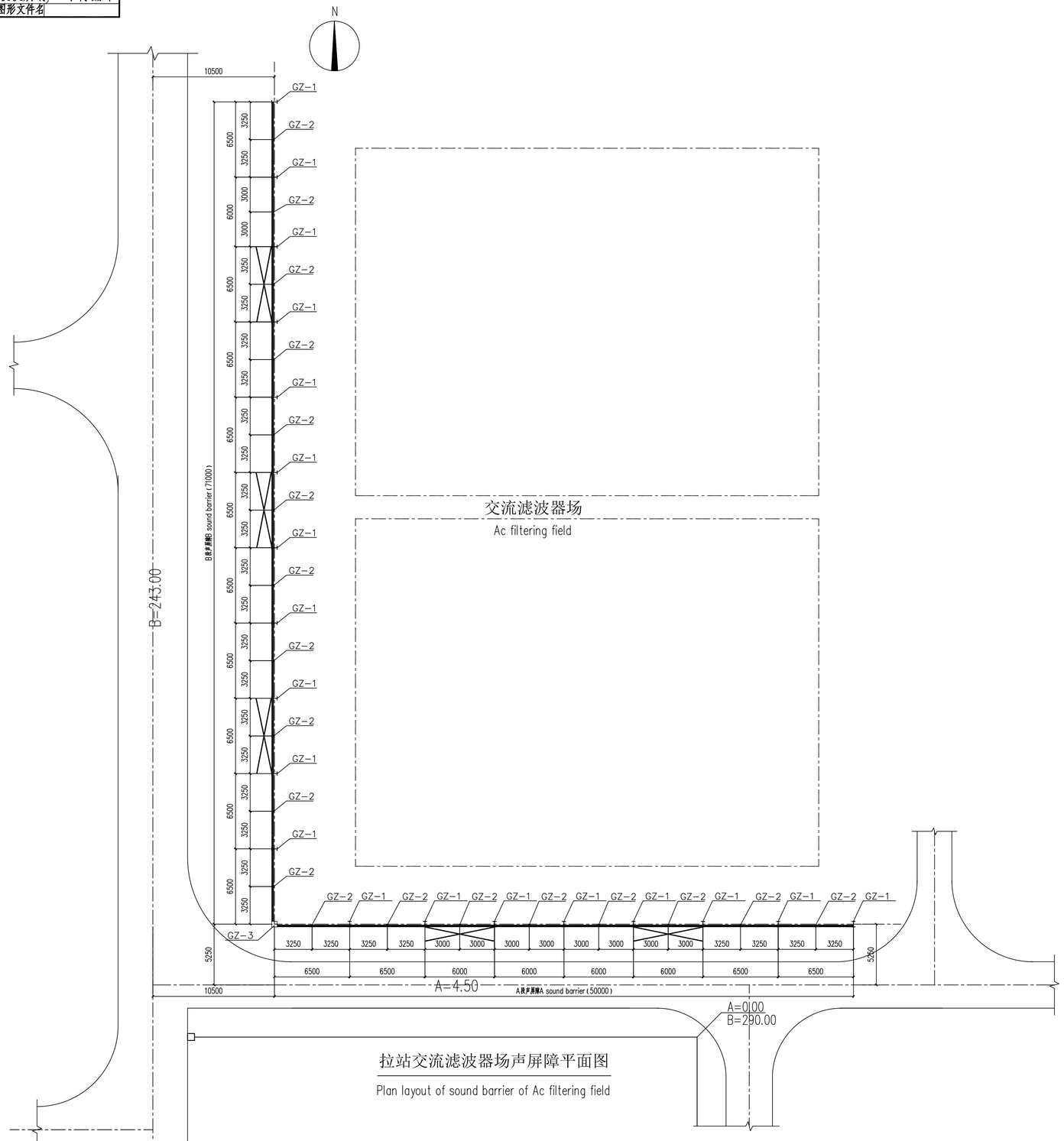

拉站交流滤波器场声屏障平面图

Plan layout of sound barrier of Ac filtering field

钢结构工程量Steel structure quantity

序号 No.	材料名称 Name	规格 specifications	长度(mm) length	数量（件） quantity	单重 (kg/m) single weight	总重 (kg) total weight	备注 note
1	GZ-1	HM488×300×11×18	8500	19	129	20833.5	
2	GZ-2	HM194×150×6×9	8225	19	31.2	4875.78	
3	GZ-3	□500×500×10	8500	1	153.86	1307.81	
4	钢梁 Steel beam	HW250×250×9×14	484000		72.4	35041.60	
5	固定角钢 Fixed Angle	L100×63×10	8500	4	12.1	411.4	
6	固定角钢 Fixed Angle	L75×50×5	8500	19	4.81	776..815	
7	固定角钢 Fixed Angle	L75×50×5	8225	19	4.81	751.683	
8	固定角钢 Fixed Angle	L100×10	200	120	15.12	362.88	
9	角钢 Angle	L110×70x6	5600	5	8.35	233.8	
10	角钢 Angle	L100×63x6	5900	14	8.35	689.71	
11	角钢 Angle	L110×8	4600	30	13.54	1818.52	
统计数量仅包含钢结构，不包含螺栓、筋板、连接板等组件The statistical quantity only includes the steel structure, excluding the bolt, reinforcement plate, connection plate and other components							
钢结构总重total weight of steel						67103.498	

隔声屏障工程量Volume of sound barrier construction

序号No.	名称name	单位unit	数量quantity	备注note
1	隔声板Sound insulation board	m^2	1089	
2	透明隔声窗 Transparent sound proof window	m^2	121	
3	绝缘软铜线Insulated soft copper wire	套 pcs	532	

说明

1.图中╳为柱间支撑平面位置示意，每处沿柱高设置三道。

Reference Drawings

Drwg. No.	Title

Revisions

	Name	Date	Notes

巴基斯坦默蒂亚里—拉合尔±660kV直流输电工程

±660kV HVDC Project from Matiari to Lahore in Pakistan

NATIONAL TRANSMISSION & DESPATCH COMPANY (NTDC) LIMITED PAKISTAN

CONTRACTOR 国家电网 STATE GRID 中国电力技术装备有限公司 CHINA ELECTRIC EQUIPMENT INDUSTRY CORPORATION CO.,LTD.

SUBCONTRACTOR NARI 国网电力科学研究院武汉南瑞有限责任公司 WUHAN NARI LIMITED LIABILITY COMPANY OF STATE GRID ELECTRIC POWER RESEARCH INSTITUTE

拉合尔±660kV换流站

±660kV Lahore Converter Station

设计阶段 PHASE: 施工图阶段 Detail Design

	姓名 Name	日期 Date
设计 Designed	杨冠仕	2018.12.10
校核 Checked	王晓辰	2018.12.12
审核 Reviewed	梁旺兴	2018.12.13
批准 Approved	张冬明	2018.12.15

声屏障总平面图

Plan layout of sound barrier

比例 Scale | 图号 DWG NO. JZ-PA-LF-003 | 版本 REV. A

594X841

版权所有，不得翻印

图形文件名

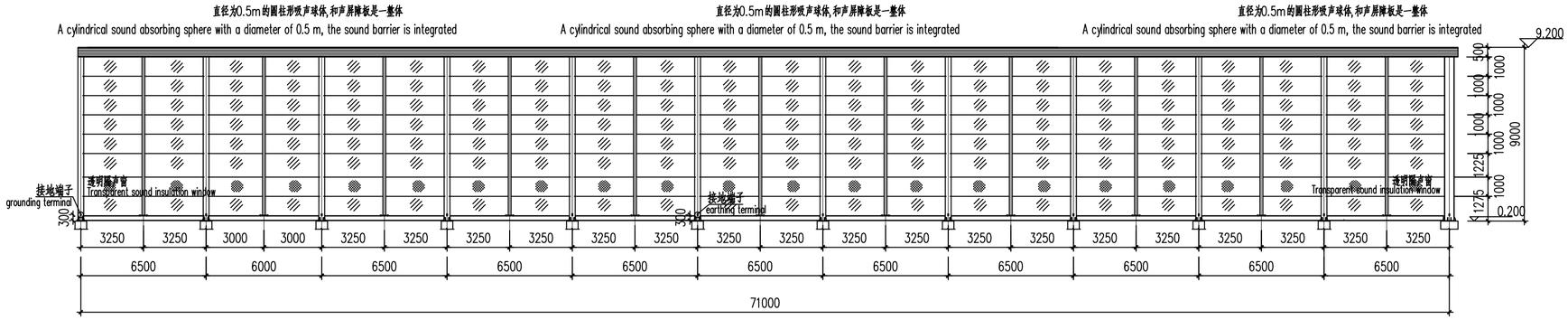

B段声屏障立面图

Elevation of sound barrier for section B

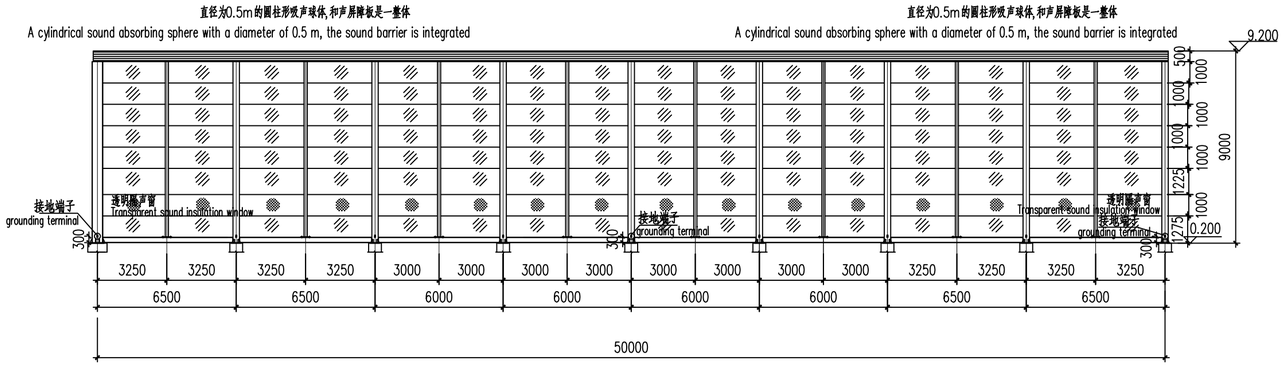

A段声屏障立面图

Elevation of sound barrier for section A

Reference Drawings

Drwg. No.	Title

Revisions

	Name	Date	Notes

巴基斯坦默蒂亚里—拉合尔±660kV直流输电工程

±660kV HVDC Project from Matiari to Lahore in Pakistan

NATIONAL TRANSMISSION & DESPATCH COMPANY (NTDC) LIMITED PAKISTAN

CONTRACTOR 国家电网 STATE GRID 中国电力技术装备有限公司 CHINA ELECTRIC POWER EQUIPMENT AND TECHNOLOGY CO.,LTD.

SUBCONTRACTOR NARI 国网电力科学研究院武汉南瑞有限责任公司 WUHAN NARI LIMITED LIABITED COMPANY OF STATE GRID ELECTRIC POWER RESERARCH INSTITUTE

拉合尔±660kV换流站

±660kV Lahore Converter Station

设计阶段 PHASE：施工图阶段 Detail Design

	姓名 Name	日期 Date
设计 Designed		2018.12.10
校核 Checked		2018.12.12
审核 Reviewed		2018.12.13
批准 Approved		2018.12.15

A~B段隔声屏障立面图

Elevation of sound barrier for section A~B

比例 Scale | 图号 DWG NO. JZ-PA-LF-004 | 版本 REV. A

420X594

版权所有， 不得翻印

图形文件名

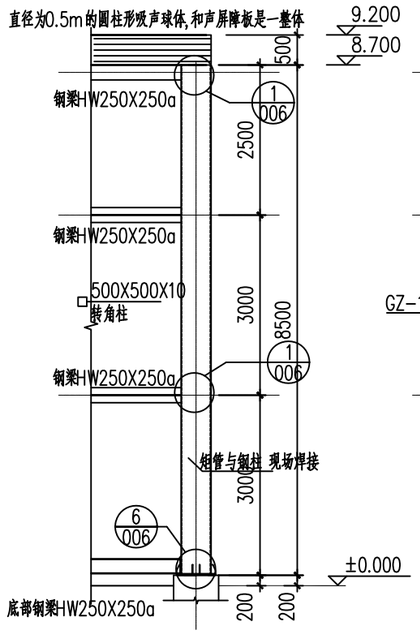

转角处声屏障立面图

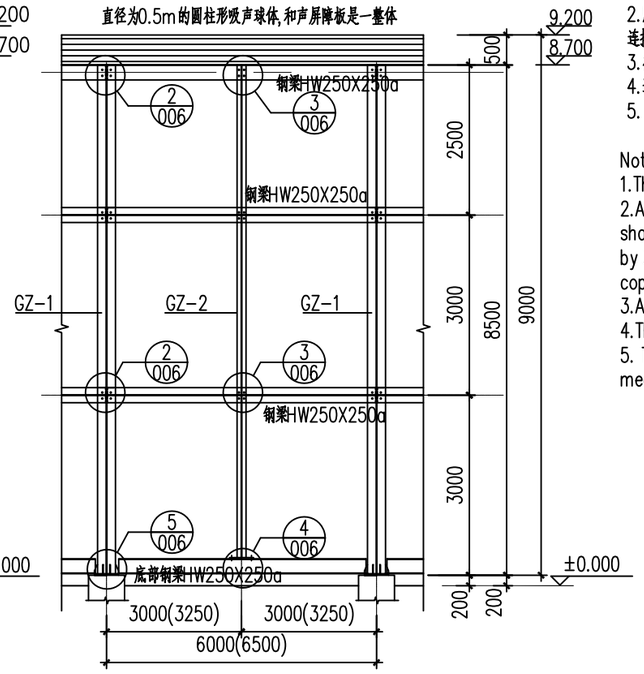

中间位置声屏障立面图

注:

1.声屏障板采用插入式安装方式。声屏障钢柱与基础之间采用地脚螺栓连接方式;

2.所有钢柱与梁之间的连接处应保证电气可靠连通，具体要求如下：钢结构节点之间应采用35mm2多股绝缘软铜线（至少2点）相互可靠连接，相邻钢柱之间的所有声屏障板应采用35mm2多股绝缘软铜线（至少2点）相互可靠连接，之后再通过35mm2多股绝缘软铜线与主体钢结构相互可靠连接（至少2点）;

3.在每个GZ-1和GZ-3底部应设一个引下接地端子;

4.透明隔声窗采用双层夹胶钢化玻璃（4mm+0.38PVB+4mm）隔声窗，厚度100mm。

5. 本图平面尺寸6000mm/6500mm为隔声屏障典型平面布置，加工前图中立柱间距尺寸需根据现场实际测量。

Note:

1.The sound barrier is installed by means of insertion. Anchor bolts are used to connect the sound barrier steel column to the foundation;

2.All connections between steel columns and beams shall ensure reliable electrical connections, as specified below: 35mm2 insulated soft copper wire (at least 2 points) shall be used for reliable connection between steel structure nodes.All sound barrier plates between adjacent steel columns shall be reliably connected with each other by 35mm2 multiple insulated soft copper wires (at least 2 points), and then reliably connected with the main steel structure through 35mm2 multiple insulated soft copper wires (at least 2 points);

3.At he bottom of each GZ-1 and GZ-3, a lead grounding terminal should be set.The grounding terminal shall be hot-dip galvanized;

4.The transparent sound insulation window is made of double-layer laminated tempered glass (4mm+ 0.38pvb +4mm) with a thickness of 100mm.

5. The plane size 6000mm/6500mm of this drawing is a typical plane arrangement of sound barrier, and the size of column spacing in the drawing needs to be measured according to the actual situation in the field before machining .

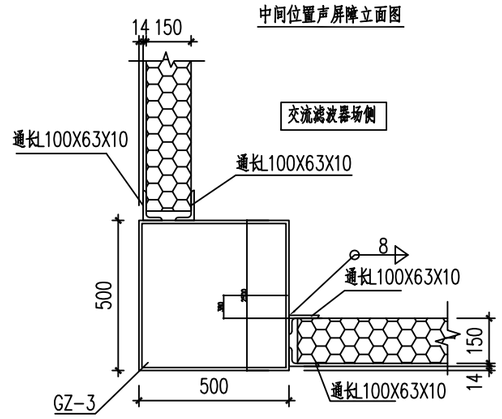

声屏障板固定详图（三）
（用于阳角方钢管）

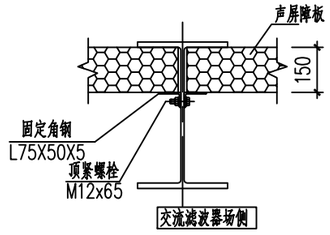

声屏障板固定详图（一）
（用于H型钢HM488X300X11X18）

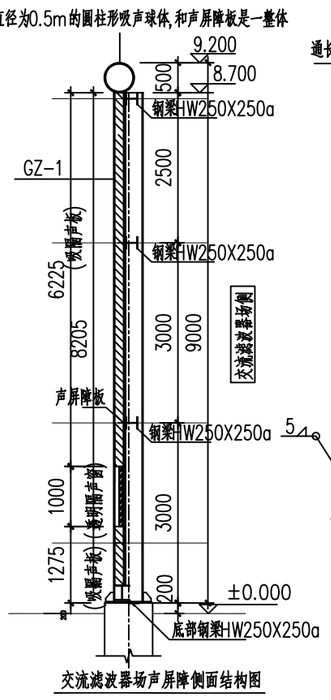

交流滤波器场声屏障侧面结构图

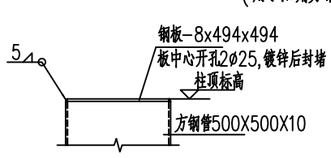

方钢管顶部封堵图

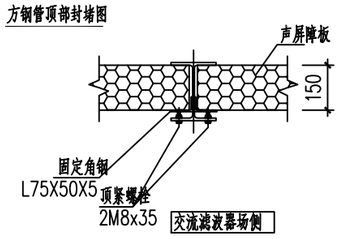

声屏障板固定详图（二）
（用于H型钢HM194X150x6x9）

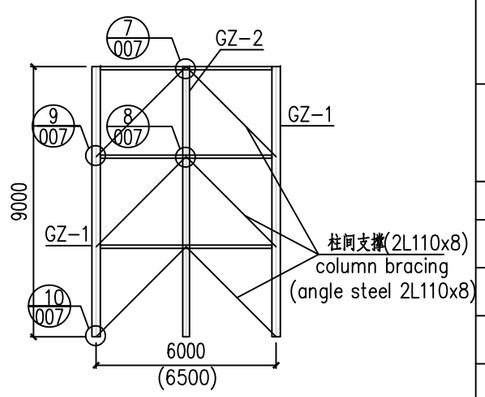

柱间支撑示意
sketch map of column bracing

Reference Drawings

Drwg. No.	Title

Revisions

	Name	Date	Notes

巴基斯坦默蒂亚里-拉合尔±660kV直流输电工程

±660kV HVDC Project from Matiari to Lahore in Pakistan

NATIONAL TRANSMISSION & DESPATCH COMPANY (NTDC) LIMITED PAKISTAN

CONTRACTOR 国家电网 STATE GRID 中国电力技术装备有限公司 CHINA ELECTRIC POWER EQUIPMENT AND TECHNOLOGY CO.,LTD.

SUBCONTRACTOR NARI 国网电力科学研究院武汉南瑞有限责任公司 WUHAN NARI LIMITED LIABITED COMPANY OF STATE GRID ELECTRIC POWER RESERARCH INSTITUTE

拉合尔±660kV换流站

±660kV Lahore Converter Station

设计阶段 PHASE: 施工图阶段 Detail Design

	姓名 Name	日期 Date
设计 Designed		2018.12.10
校核 Checked		2018.12.12
审核 Reviewed		2018.12.13
批准 Approved		2018.12.15

声屏障节点图

Node graph of sound barrier

比例 Scale | 图号 DWG NO. JZ-PA-LF-005 | 版本 REV. A

297X420

版权所有，不得翻印
图形文件名

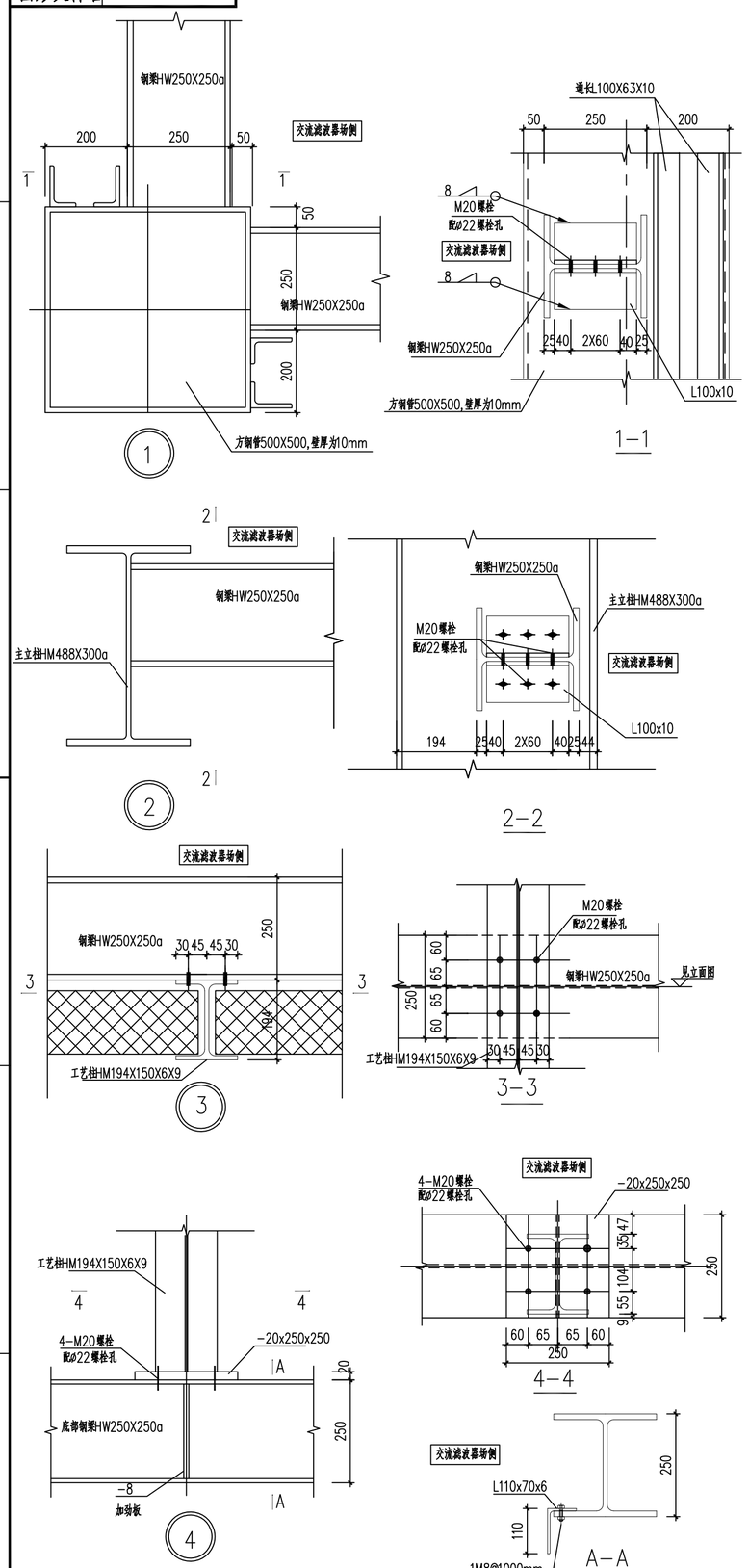

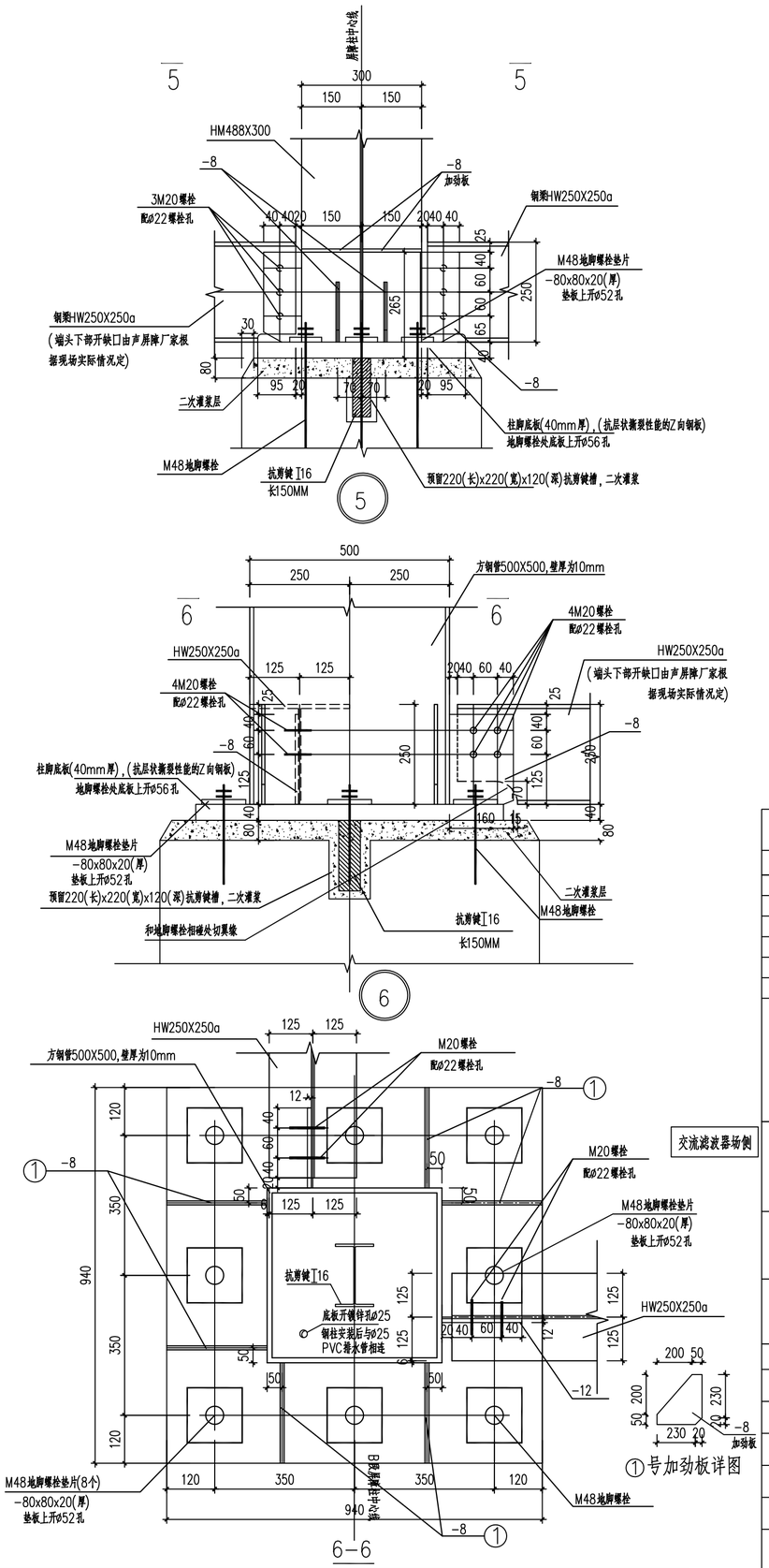

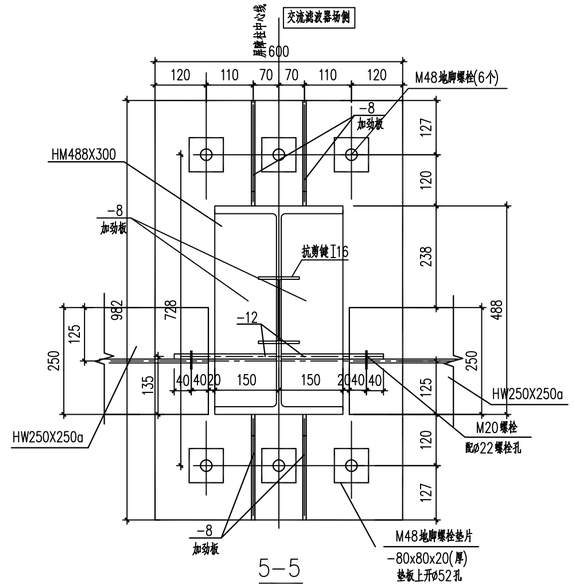

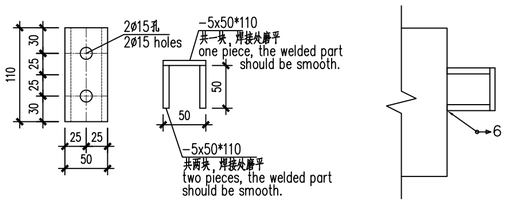

Reference Drawings

Drwg. No.	Title

Revisions

	Name	Date	Notes

巴基斯坦默蒂亚里—拉合尔±660kV直流输电工程

±660kV HVDC Project from Matiari to Lahore in Pakistan

NATIONAL TRANSMISSION & DESPATCH COMPANY (NTDC) LIMITED PAKISTAN

CONTRACTOR 国家电网 STATE GRID 中国电力技术装备有限公司 CHINA ELECTRIC POWER EQUIPMENT AND TECHNOLOGY CO.,LTD.

SUBCONTRACTOR NARI 国网电力科学研究院武汉南瑞有限责任公司 WUHAN NARI LIMITED LIABITED COMPANY OF STATE GRID ELECTRIC POWER RESERARCH INSTITUTE

拉合尔±660kV换流站

±660kV Lahore Converter Station

设计阶段 PHASE：施工图阶段 Detail Design

	姓名 Name	日期 Date
设计 Designed		2018.12.10
校核 Checked		2018.12.12
审核 Reviewed		2018.12.13
批准 Approved		2018.12.15

钢结构节点图(一)

Node graph of steel structure (1)

比例 Scale：图号 DWG NO. JZ-PA-LF-006：版本 REV. A

420X594

版权所有，不得翻印

图形文件名

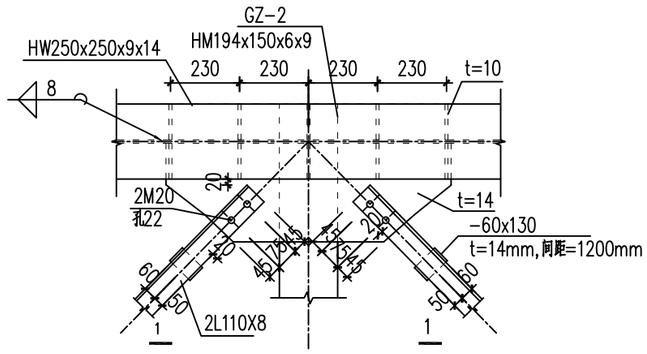

7

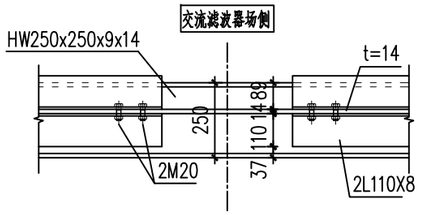

1-1

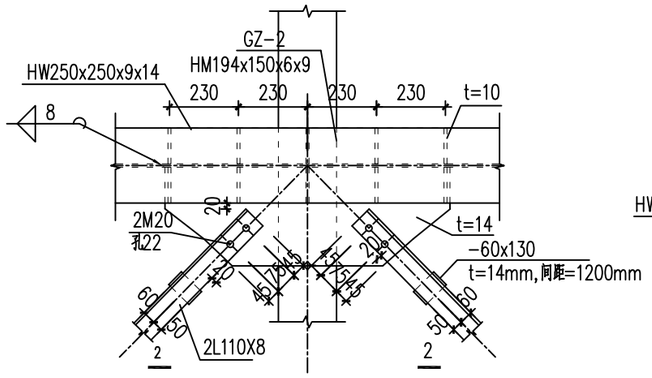

8

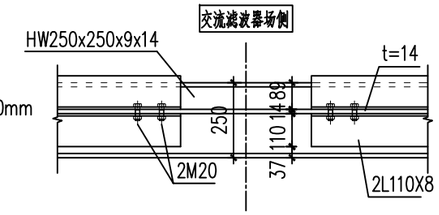

2-2

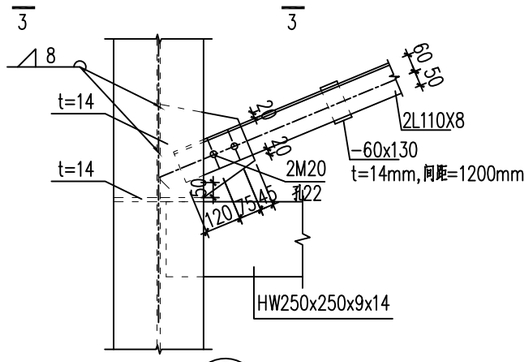

9

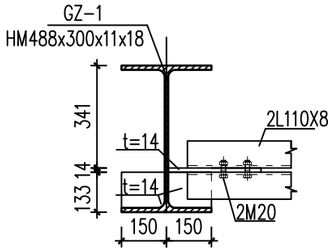

3-3

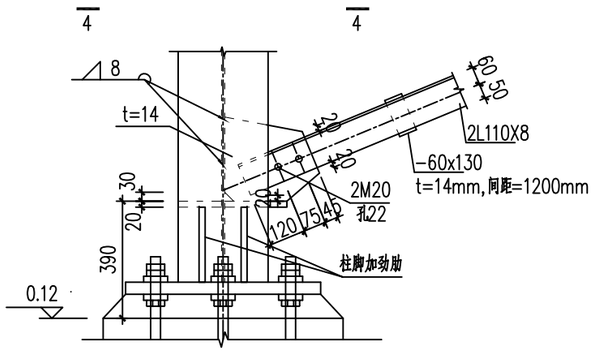

10

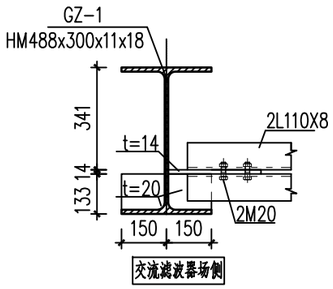

4-4

说明:

1. 图中尺寸仅供备料及放样时参考,所有构件及钢板尺寸均需放样后下料,下料制作完成进行预组装,待组装合格后方可成批下料。
2. 隔声屏障典型间距为6500mm/6000mm，参见005图，加工前图中立柱间距尺寸需根据现场实际测量。

Reference Drawings

Drwg. No.	Title

Revisions

	Name	Date	Notes

巴基斯坦默蒂亚里–拉合尔±660kV直流输电工程

±660kV HVDC Project from Matiari to Lahore in Pakistan

NATIONAL TRANSMISSION & DESPATCH COMPANY (NTDC) LIMITED PAKISTAN

CONTRACTOR 国家电网 STATE GRID 中国电力技术装备有限公司 CHINA ELECTRIC POWER EQUIPMENT AND TECHNOLOGY CO.,LTD.

SUBCONTRACTOR NARI 国网电力科学研究院武汉南瑞有限责任公司 WUHAN NARI LIMITED LIABITED COMPANY OF STATE GRID ELECTRIC POWER RESERARCH INSTITUTE

拉合尔±660kV换流站

±660kV Lahore Converter Station

设计阶段 PHASE: 施工图阶段 Detail Design

	姓名 Name	日期 Date
设计 Designed		2018.12.10
校核 Checked		2018.12.12
审核 Reviewed		2018.12.13
批准 Approved		2018.12.15

钢结构节点图(二)

Node graph of steel structure (2)

比例 Scale | 图号 DWG NO. JZ-PA-LF-007 | 版本 REV. A

297X420